Job Name :	Location :
Purchaser :	P.O. No. :
Engineer :	Architect :
Submitted To :	Date :
Submitted By :	For : ☐ Reference ☐ Approval ☐ Construction
Unit Designation : Schedule No.:	Model No.:

Submittal Data : LS240HE

Capacities :

Cooling .....22,500/22,100 Btu/h
Heating .....22,500/22,100 Btu/h
Outdoor Design Temp.(°F,DB/WB)
Cooling 95/75
Heating 47/43
SEER 13
EER.....10
HSPF.....7.8

Indoor Unit :

Power Supply (V,Ph,Hz) .....36V DC
Maximum Fuse Size.....Powered by
Minimum Ampacity.....Outdoor Unit
Weight (lbs).....28.6
Sound (dB(A),H/M/L Cool).....46/41/38
Air Circulation (CFM).....530
Dehumidification (pts/hr) 6.6

Outdoor Unit :

Power Supply (V,Ph,Hz) 230/208,1,60
Maximum Fuse Size.....30
Minimum Ampacity.....12.5/11.5
Weight (lbs).....169.6
Sound (dB(A), High Cool) 57

Refrigerant Piping :

Maximum Length (ft).....50
Maximum Height Difference (ft).....25
Liquid Side (O.D).....1/4”
Gas Side (O.D).....5/8”

Standard Features :

- Five Year Compressor Warranty
- Two Year Functional Parts Warranty
- R-410a Refrigerant
- Multi Power System ™
- Triple Filter Air Purifying System
- Chaos Swing Air Circulation
- Jet Cool ™
- LCD Wireless Remote Controller
- Auto Restart
- 24 Hour On/Off Timer
- Temperature Display on Indoor Unit

Note :

LSN240HE

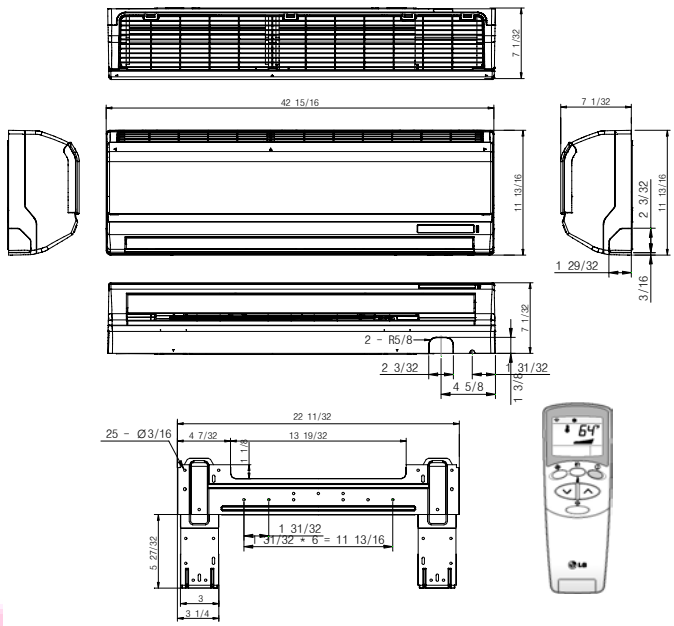

LSU240HE

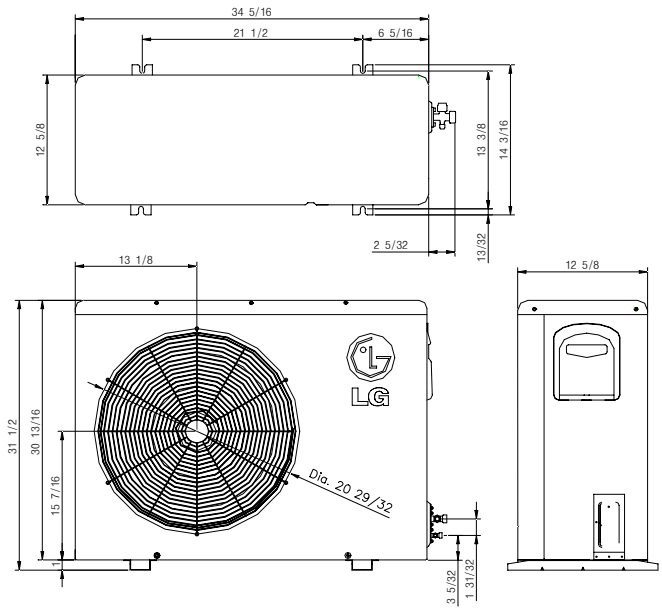

© LG Electronics USA 2006