# 2101 - 'Verseuse' Wall Mounted Mixer

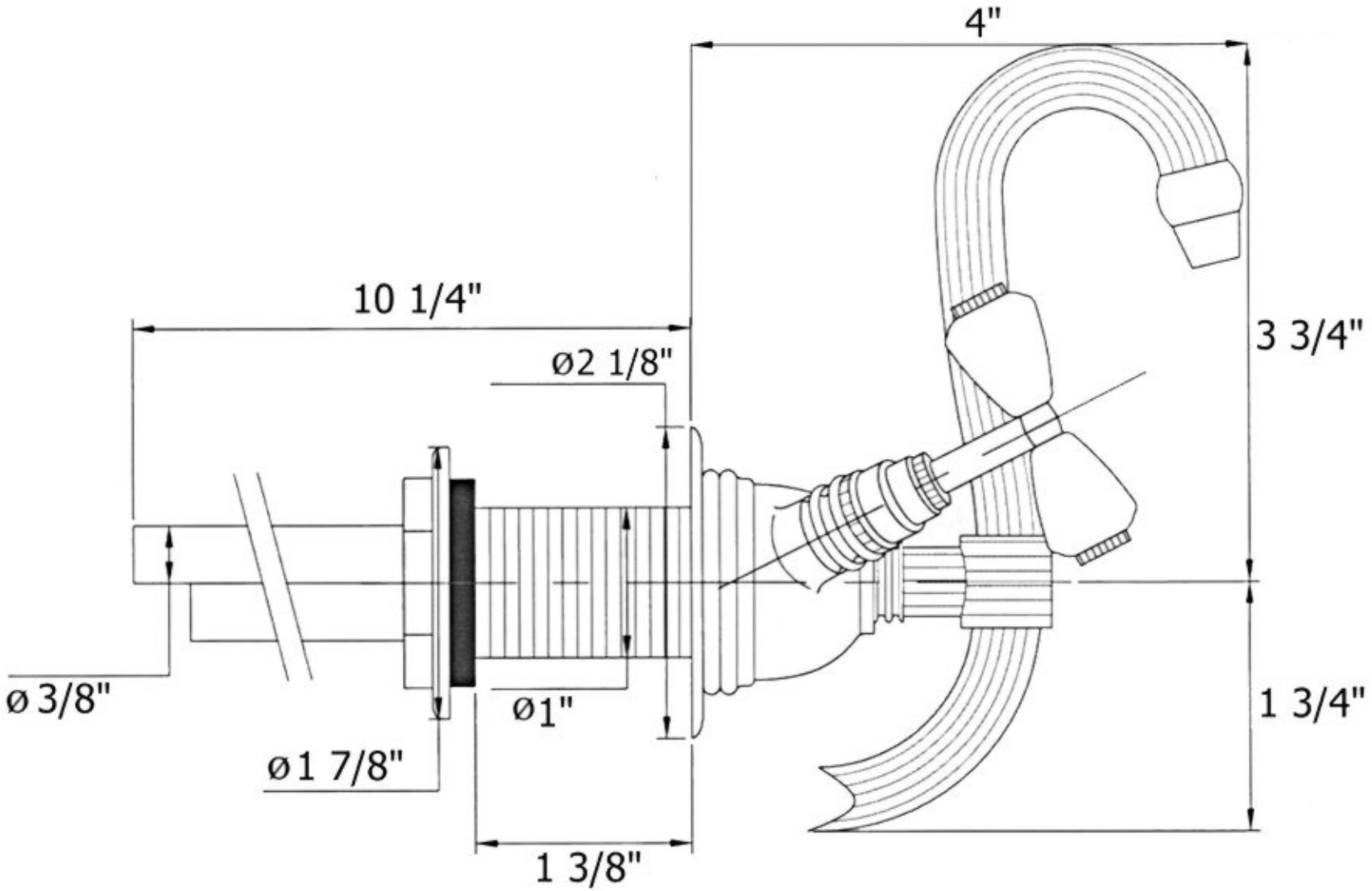


Copyright©2003 Herbeau Creations. All Rights Reserved. All Products and specifications are subject to change without notice.
Herbeau Creations is not responsible for typographical and/or dimensional errors. Typographical errors are subject to correction.